Service Manual

Part 0 (03)

Specifications

C 303
Civilian Version

Trucks

VOLVO

Contents

General 1

Lubrication 4

Engine
- General 5
- Engine Assembly 6
- Lubricating System 9
- Fuel System 10
- Cooling System 10

Electrical System and Instruments 12

Power Transmission, Rear Axle
- Clutch 15
- Gearbox 15
- Transfer Box 16
- Propeller Shaft 17
- Rear Axle Gear 17
- Hub Gear 18

Brakes
- Running Brakes 18
- Parking Brake 19

Front End and Steering Assembly 20

Frame, Suspension, Wheels 21

Winch 23

Reproduction permitted if source quoted

GENERAL

TYPE DESIGNATION PLATES

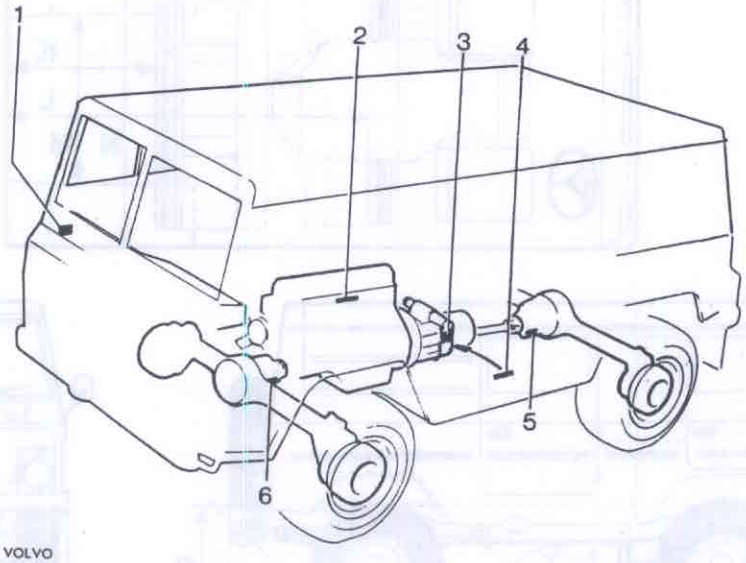

VOLVO
121 825

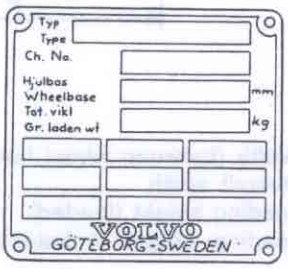

VOLVO
109 935

1. Type designation plate at right-hand end of instrument panel.

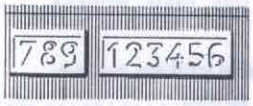

VOLVO
109 938

2. Engine number stamped on left-hand side of cylinder block.

VOLVO
109 939

3. Type designation plate on left-hand side of gearbox.

VOLVO
109 940

4. Transfer gearbox plate on front flange.

VOLVO
109 941

5, 6. Axle gear plate on front and rear axles.

GENERAL DATA

Hard top

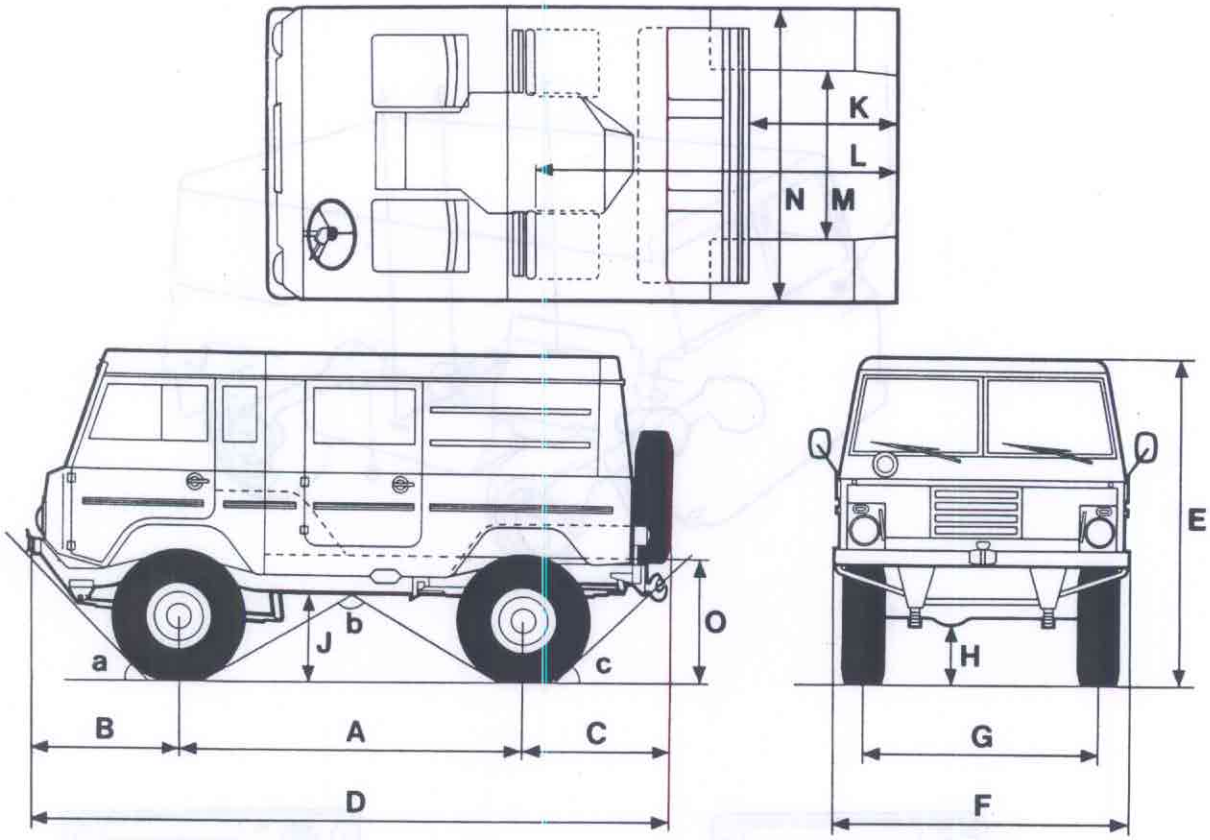

Dimensions, mm (in)

A	Wheelbase	2300 (91)
D	Overall length	4350 (171)
F	Overall width	1900 (75)
E	Overall height (loaded)	2170 (85)
	Overall height (unloaded)	2300 (91)
B	Front overhang	965 (38)
C	Rear overhang	925 (36)
G	Track width, front and rear	1540 (61)
	Turning circle diameter	11460 (451)
H	Smallest ground clearance	380 (15)
J	Ground clearance between axles	420 (17)
b	Underbody angle	125°
a	Angle of incidence, front	45°
c	Angle of incidence, rear	45°
	Side stability	40%
	Climbing ability	80%
	Max. fording depth	700 (28)
Loading space		
	Height	1250 (49)
K	Length	1000 (39)
L	Length (backrest let down)	2300 (91)
M	Width (between wheel housings)	1070 (42)
N	Overall width	1700 (67)
O	Loading height (loaded)	830 (33)
	Loading height (unloaded)	960 (38)

Weights, kg (lb)

Service weight, front	1230 (2705)
Service weight, rear	990 (2180)
Service weight, total	2220 (4885)
Max. front axle pressure	1650 (3630)
Max. rear axle pressure	1800 (3960)
Max. gross weight	3450 (7590)
Max. pay load, approx.	1150 (2530)

Speed and pulling power

Max. speed	125 km/h (78 mile/h)
Cruising speed at 4000 rev/min	100 km/h (62 mile/h)
Min. speed at 1000 rev/min	2.9 km/h (1.8 mile/h
Max. pulling power	23250 N (2370 kgf 5215 lbf)
Max. trailer weight	2500 kg (5500 lbf)

Canvas

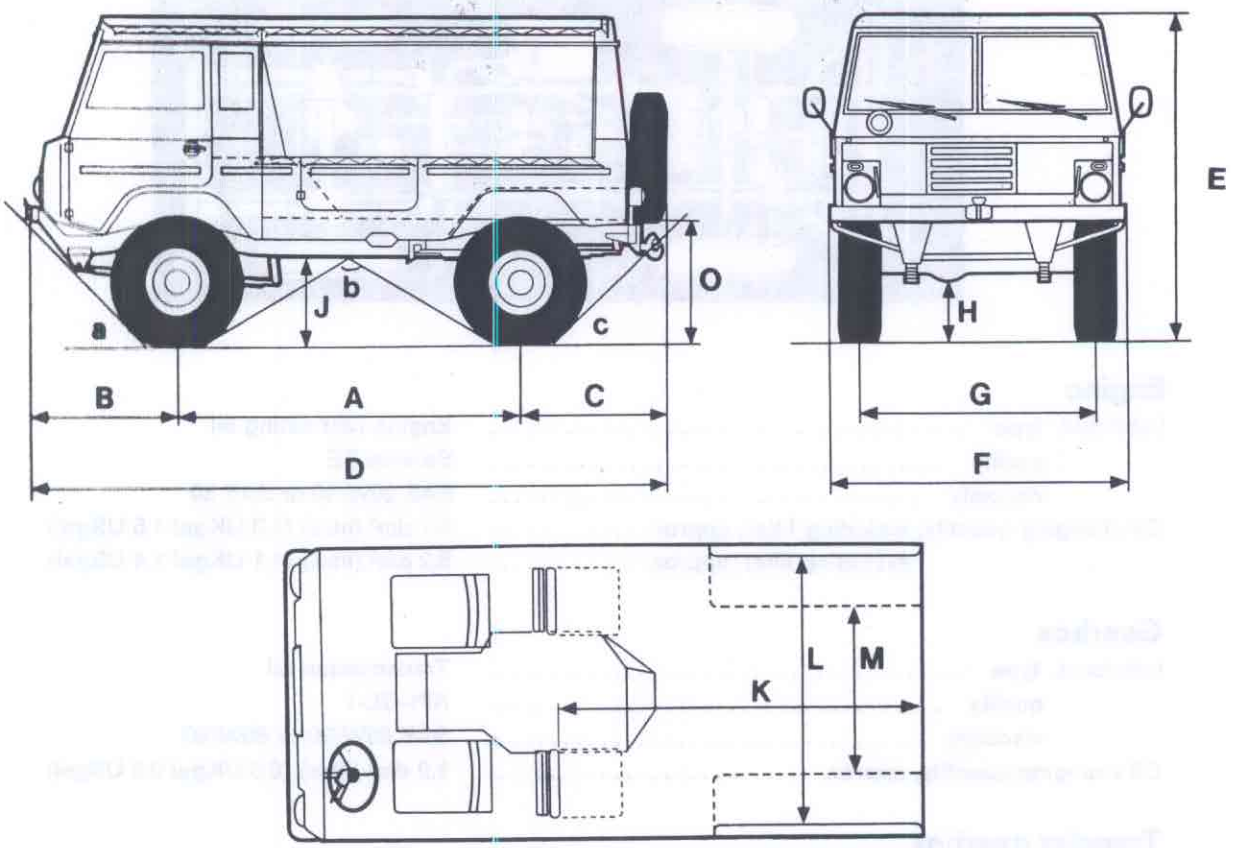

Dimensions, mm (in)

A	Wheelbase	2300 (91)
D	Overall length	4350 (171)
F	Overall width	1900 (75)
E	Overall height (loaded)	2170 (85)
	Overall height (unloaded)	2300 (91)
B	Front overhang	965 (38)
C	Rear overhang	985 (39)
G	Track width, front and rear	1540 (61)
	Turning circle diameter	11460 (451)
H	Smallest ground clearance	380 (15)
J	Ground clearance between axles	420 (17)
b	Underbody angle	125°
a	Angle of incidence, front	45°
c	Angle of incidence, rear	45°
	Side stability	40%
	Climbing ability	80%
	Max. fording depth	700 (28)
Loading space		
	Height	1250 (49)
K	Length	2300 91)
M	Width (between upright seats)	1330 (52)
L	Overall width	1550 (61)
O	Loading height (loaded)	830 (33)
	Loading height (unloaded)	960 (38)

Weights, kg (lb)

Service weight, front	1140 (2510)
Service weight, rear	960 (2110)
Service weight, total	2100 (4620)
Max. front axle pressure	1650 (3630)
Max. rear axle pressure	1800 (3960)
Max. gross weight	3450 (7590)
Max. pay load, approx.	1150 (2530)

Speed and pulling power

Max. speed	120 km/h (75 mile/h)
Cruising speed at 4000 rev/min	100 km/h (62 mile/h)
Min. speed at 1000 rev/min	2.9 km/h (1.8 mile/h)
Max. pulling power	23250 N (2370 kgf 5225 lbf)
Max. trailer weight	2500 kg (5512 lbf)

LUBRICATION

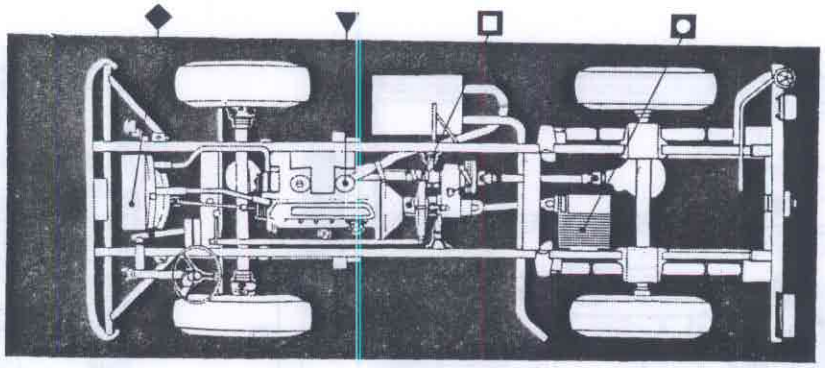

Engine

Lubricant, type	Engine lubricating oil
quality	Service SE
viscosity	SAE 20W/30 or SAE 30
Oil changing quantity, including filter, approx.	5.7 dm³ (litre) (1.3 UKgal 1.5 USgal)
excluding filter, approx.	5.2 dm³ (litre) (1.1 UKgal 1.4 USgal)

Gearbox

Lubricant, type	Transmission oil
quality	API-GL-1
viscosity	SAE 85W/90 or 80W/90
Oil changing quantity, approx.	1.2 dm³ (litre) (0.3 UKgal 0.3 USgal)

Transfer gearbox

Lubricant, type	Transmission oil
quality	API-GL-1
viscosity	SAE 85W/90 or 80W/90
Oil changing quantity, approx.	1.3 dm³ (litre) (0.3 UKgal 0.4 USgal)

Axle centre gear

Lubricant, type	Transmission oil
quality	API-GL-5 (MIL-L-2105 B or C)
viscosity	SAE 90 or 80W/90
Oil changing quantity, front, approx.	1.5 dm³ (litre) (0.3 UKgal 0.4 USgal)
rear, approx.	1.5 dm³ (litre) (0.3 UKgal 0.4 USgal)

Hub gear

Lubricant, type	Transmission oil
quality	API-GL-5 (MIL-2105 B or C)
viscosity	SAE 90 or 80W/90
Oil changing quantity, front, approx.	0.3 dm³ (litre) (0.07 UKgal 0.08 USgal)
rear, approx.	0.4 dm³ (litre) (0.09 UKgal 0.10 USgal)

Steering gear

Lubricant, type	Transmission oil
quality	API-GL-5 (MIL-L-2105 B or C)
viscosity	SAE 90 or 80W/90
Oil changing quantity, approx.	0.5 dm³ (litre) (0.1 UKgal 0.1 USgal)

Power take-off

Lubricant, type	Transmission oil
quality	API-GL-1
viscosity	SAE 85W/90 or 80W/90
Oil changing quantity, approx.	0.2 dm³ (litre) (0.04 UKgal 0.05 USgal)

Winch

Lubricant, type	Transmission oil
quality	API-GL-1
viscosity	SAE 85W/90 or 80W/90
Oil changing quantity, winch housing, approx.	1.2 dm³ (litre) (0.26 UKgal 0.32 USgal)
planetary gear, approx.	0.6 dm³ (litre) (0.13 UKgal 0.16 USgal)

ENGINE

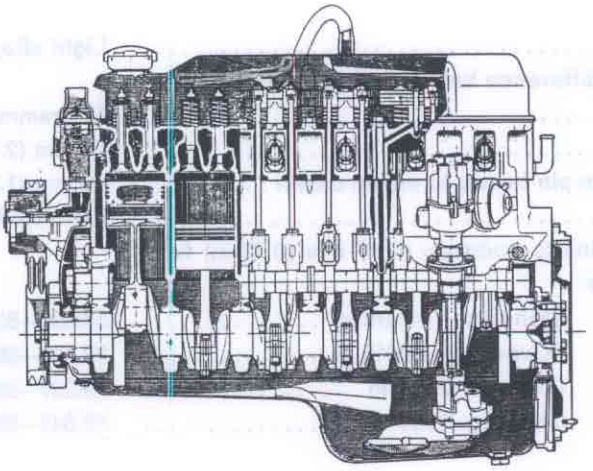

VOLVO
121 810

GENERAL

Type designation	B 30 A–498218
Max. output, kW at rev/s DIN	92/71
hp at rev/min DIN	125/4250
Max. torque, Nm at rev/s DIN	219/42
kgf m (lbf ft) at rev/min DIN	22.4 (162)/2500
Compression pressure (warm engine) when cranking with starter motor 4.2–5 rev/s (250–300 rev/min)	1000–1200 kPa (10–12 kgf/cm²) (142–170 lbf/in²)
Compression ratio	9.3:1
Number of cylinders	6
Cylinder bore	88.9 mm (3.5 in)
Stroke	80 mm (3.15 in)
Displacement	2.98 dm³ (litre) (182 in³)
Idling speed	11.67–13.33 rev/s (700–800 rev/min)

ENGINE ASSEMBLY

Cylinder head

Height, measured from cylinder head contact face to face for bolt heads	86.7 mm (3.413 in)
Distance from top side of head to overflow pipe upper end (pipe placed under thermostat)	35 mm (1.38 in)
Cylinder head gasket, thickness, unloaded	0.8 mm (0.031 in)
loaded	0.7 mm (0.028 in)

Cylinder block

Material	Special alloy cast iron
Bore	
Standard (D-marked)	88.91–88.92 mm (3.5004–3.5008 in)
"Oversize" 0.03 mm (0.0012 in)	88.94–88.95 mm (3.5016–3.5020 in)
Oversize 0.015 in	89.29–89.30 mm (3.5153–3.5157 in)
Oversize 0.030 in	89.67–89.68 mm (3.5303–3.5307 in)
The cylinders should be rebored at a wear of (if engine has abnormal oil consumption)	0.25 mm (0.010 in)

Pistons

Material	Light alloy
Permissible weight difference between pistons in same engine	10 grammes (0.35 oz.)
Height, total	71 mm (2.79 in)
Height from gudgeon pin centre to piston crown	46 mm (1.81 in)
Piston clearance	0.01–0.03 mm (0.0004–0.0012 in)
Diameter, right angles to gudgeon pin 7 mm (0.28 in) from lower edge of piston:	
Standard, D-marked	88.890–88.900 mm (3.4995–3.5000 in)
"Oversize" 0.0012 in	88.920–88.930 mm (3.5008–3.5011 in)
Oversize 0.015 in	89.267–89.282 mm (3.5144–3.5150 in)
Oversize 0.030 in	89.647–89.662 mm (3.5294–3.5300 in)

Piston rings

Piston ring gap, measured in ring opening	0.40–0.55 mm (0.016–0.022 in)
Oversize on piston rings	0.03 mm (0.0012 in)
	0.015 in
	0.030 in

Compression rings

Upper ring chromed	
Number on each piston	2
Height	1.98 mm (0.078 in)
Compression ring clearance in groove	0.040–0.072 mm (0.0016–0.0028 in)

Oil scraper rings

Number on each piston	1
Height	4.74 mm (0.186 in)
Scraper ring clearance in groove	0.040–0.072 mm (0.0016–0.0028 in)

Gudgeon pins

Floating fit. Circlips at both ends on piston.	
Fit in connecting rod bushing	Close running fit (light thumb pressure)

Clearance, gudgeon pin – connecting rod bushing	0.0100–0.0135 mm (0.0004–0.0005 in)
Fit in piston	Slide fit (thumb pressure)
Clearance, gudgeon pin – piston	0.0035–0.0070 mm (0.00001–0.00003 in)
Diameter, standard	24.00 mm (0.945 in)
oversize 0.05 mm (0.002 in)	24.05 mm (0.947 in)

Valve mechanism

VALVES

Inlet

Disc diameter	42 mm (1.654 in)
Stem diameter	7.955–7.970 mm (0.3132–0.3138 in)
Stem, max. permissible wear	0.02 mm (0.0008 in)
Valve seat angle	44.5°
Cylinder head seat angle	45.25°
Seat width in cylinder head	2 mm (0.08 in)

Exhaust

Disc diameter	35 mm (1.378 in)
Stem diameter	7.925–7.940 mm (0.3120–0.3126 in)
Stem, max. permissible wear	0.02 mm (0.0008 in)
Valve seat angle	44.5°
Cylinder head seat angle	45.25°
Seat width in cylinder head	2 mm (0.08 in)

Valve clearance

Clearance, hot and cold engine, exhaust	0.40–0.45 mm (0.016–0.018 in)
Clearance, hot and cold engine, inlet	0.40–0.45 mm (0.016–0.018 in)

VALVE GUIDES

Length, inlet valve	52 mm (2.047 in)
exhaust valve	59 mm (2.323 in)
Inner diameter	8.000–8.022 mm (0.3150–0.3158 in)
Height above upper face of cylinder head	17.5 mm (0.689 in)
Clearance, valve stem – valve guide, inlet valve	0.030–0.067 mm (0.0012–0.0026 in)
exhaust valve	0.060–0.097 mm (0.0024–0.0038 in)
max. permissible clearance	0.15 mm (0.006 in)

VALVE SPRINGS

Length, unloaded, approx.	45 mm (1.77 in)
with a loading of 255 ± 20N (25.5 ± 2 kgf 56 ± 4.4 lbf)	39 mm (1.54 in)
with a loading of 660 ± 35N (66 ± 3.5 kgf 145 ± 7.7 lbf)	30.5 mm (1.20 in)

ROCKER ARM MECHANISM

Rocker arm radius at valve end	12 mm (0.48 in)
Rocker arm bushing, max. permissible wear	0.1 mm (0.004 in)

Camshaft transmission

Timing gears

Crankshaft gear, number of teeth	28
Camshaft gear, number of teeth	56
Backlash	0.04–0.08 mm (0.0016–0.0032 in)
Max. permissible backlash	0.12 mm (0.0048 in)
End float, camshaft	0.02–0.06 mm (0.0008–0.0024 in)

Camshaft

Marking/max. lifting height	A/6 mm (0.24 in)
Number of bearings	4
Bearing journal, diameter	46.975–47.000 mm (1.8494–1.8504 in)
Max. permissible out-of-round (with new bearings)	0.07 mm (0.0028 in)
Radial clearance	0.020–0.075 mm (0.0008–0.0030 in)
End float	0.020–0.060 mm (0.0008–0.0024 in)
Valve clearance for checking camshaft setting (cold engine)	1.10 mm (0.043 in)
Inlet valve should then open at	10° A.T.D.C.

Camshaft bearing

Bearing diameter	47.020–47.050 mm (1.8512–1.8524 in)
Max. permissible wear	0.02 mm (0.0008 in)

Crank mechanism

CONNECTING RODS

End float on crankshaft	0.15–0.35 mm (0.006–0.014 in)
Length, centre – centre	144.9–145.1 mm (5.70–5.71 in)
Max. permissible weight deviation between connecting rods in same engine	10 grammes (0.35 oz.)

CRANKSHAFT

Crankshaft end float	0.037–0.147 mm (0.0015–0.0058 in)
max. permissible end float	0.15 mm (0.0060 in)
Main bearings, radial clearance	0.028–0.083 mm (0.0011–0.0033 in)
Big-end bearings, radial clearance	0.024–0.070 mm (0.0009–0.0028 in)

MAIN BEARINGS

Main bearing journals

Diameter, standard	63.451–63.464 mm (2.4981–2.4986 in)
undersize 0.010 in	63.197–63.210 mm (2.4881–2.4886 in)
0.020 in	62.943–62.256 mm (2.4781–2.4786 in)
Width on crankshaft for pilot bearing shell	
standard	38.960–39.000 mm (1.5338–1.5354 in)
oversize 1 (undersize shell 0.010 in)	39.061–39.101 mm (1.5378–1.5394 in)
2 (undersize shell 0.020 in)	39.163–39.203 mm (1.5419–1.5434 in)
Max. permissible out-of-roundness	0.05 mm (0.0020 in)

Main bearing shells

Thickness, standard	1.975–1.985 mm (0.0780–0.0781 in)
undersize 0.010 in	2.102–2.112 mm (0.0827–0.0831 in)
0.020 in	2.229–2.239 mm (0.0878–0.0881 in)

BIG-END BEARINGS

Big-end bearing journals

Width of bearing recess	29.95–30.05 mm (1.1779–1.1830 in)
Diameter, standard	53.987–54.000 mm (2.1255–2.1260 in)
undersize 0.010 in	53.733–53.746 mm (2.1155–2.1160 in)
0.020 in	53.479–53.492 mm (2.1055–2.1060 in)
Max. permissible out-of-round	0.07 mm (0.0028 in)